AVK TELESCOPIC EXTENSION SPINDLE FOR GATE VALVES SERIES 04/04

Mounting instruction / Montagevejledning
Einbauanleitung / Instruction de montage

1.



2.



3.



4.



5.



6.



7.



8.



Expect... AVK

COPYRIGHT©AVK GROUP A/S 2014 - AVK INTERNATIONAL A/S, Bizonvej 1, DK-8464 Galten - www.avkvalves.eu

AVK telescopic extension spindle

Part No.: XXXXXXXXXX





www.avkvalves.eu



DN 50-125:
Max. 200 Nm

DN 150-400:
Max. 400 Nm

DN 450-600:
Max. 500 Nm

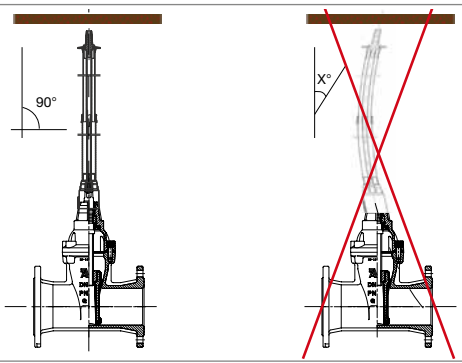

Expect...

COPYRIGHT©AVK GROUP A/S 2014 - AVK INTERNATIONAL A/S, Bizonvej 1, DK-8464 Galten - www.avkvalves.eu