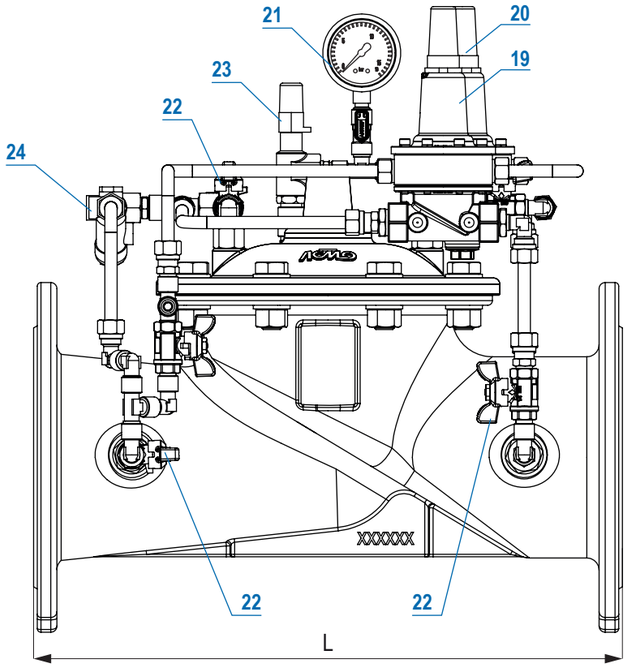

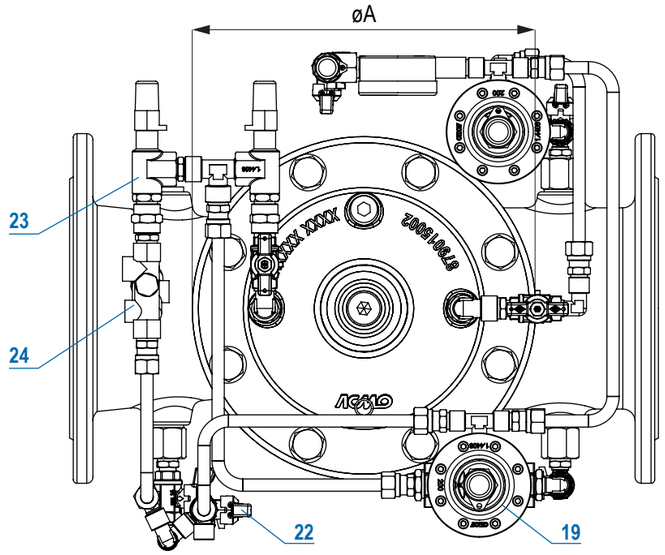

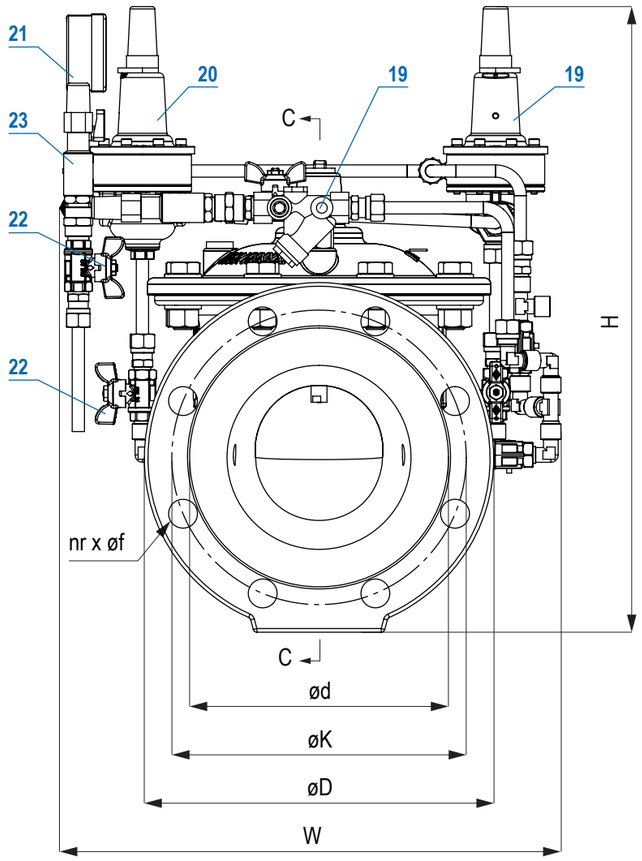

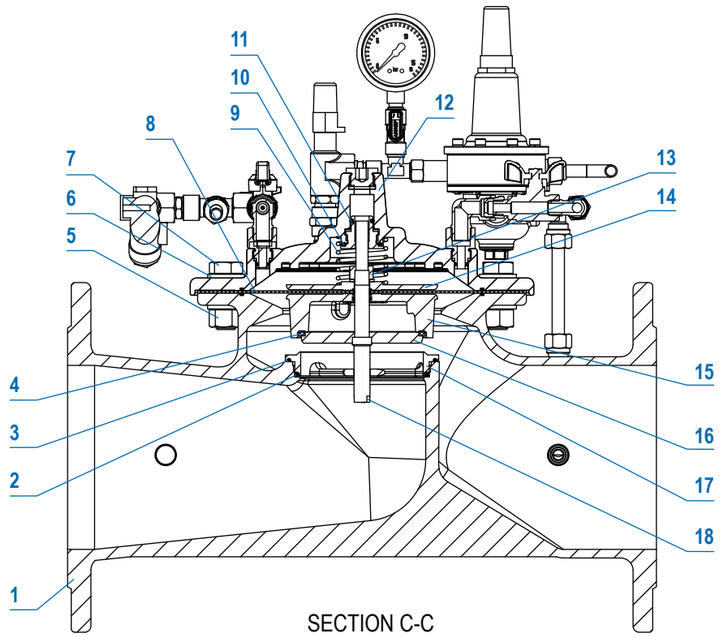

SECTION C-C

DN	L	DIMENSIONS EN1092-2 PN10 øD	øK	øf	nr	ød	EN1092-2 PN16 øD	øK	øf	nr	ød	FULL BORE H*	øA	W*	RED.BORE H	øA*	W*	WEIGHT* kg FB	RB
50	230	165	125	19	4	99	165	125	19	4	99	436	188	310	-	-	-	20	-
65	290	185	145	19	4	118	185	145	19	4	118	465	215	325	453	188	324	24	22
80	310	200	160	19	8	132	200	160	19	8	132	480	234	340	470	215	339	28	26
100	350	220	180	19	8	156	220	180	19	8	156	500	280	360	488	234	351	37	30
125	400	250	210	19	8	184	250	210	19	8	184	-	-	-	506	234	375	-	34
150	480	285	240	23	8	211	285	240	23	8	211	635	406	415	509	280	405	83	47
200	600	340	295	23	8	266	340	295	23	12	266	690	507	470	605	406	466	140	97
250	730	395	350	23	12	319	405	355	28	12	319	770	554	585	716	507	587	200	158
300	850	445	400	23	12	370	460	410	28	12	370	840	604	640	789	554	629	257	222
350	980	505	460	23	16	429	520	470	28	16	429	960	710	700	875	604	690	458	325
400	1100	565	515	28	16	480	580	525	31	16	480	1020	780	760	996	710	750	544	497
450	1200	615	565	28	20	530	640	585	31	20	548	1200	929	820	1060	780	810	870	643
500	1250	670	620	28	20	582	715	650	34	20	609	1275	1018	895	1245	929	885	1115	933
600	1450	780	725	31	20	682	840	770	37	20	720	1420	1186	1020	1355	1018	1010	1674	1270

** INDICATIVE DIMENSIONS*

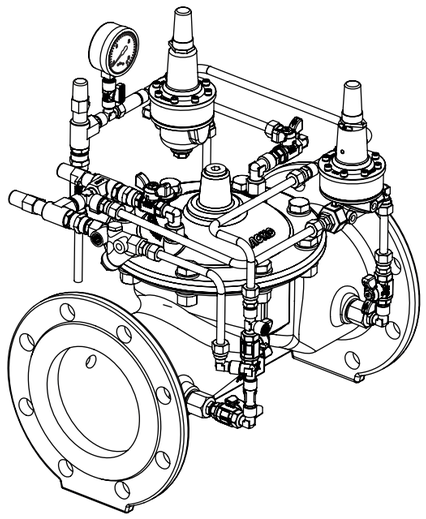

MATERIALS				
ITEM	**DESCRIPTION**	**MATERIALS**		**STANDARDS**
1	BODY	DUCTILE IRON	EN GJS-500-7	EN 1563
2	O-RING	RUBBER	EPDM	EN 681-1
3	O-RING	RUBBER	EPDM	EN 681-1
4	PLUG SEALING	RUBBER	EPDM	EN 681-1
5	HEX NUT	STAINLESS STEEL	A2	EN ISO3506-1
6	WASHER	STAINLESS STEEL	AISI304	EN 10088-3
7	BOLTS	STAINLESS STEEL	A2	EN ISO3506-1
8	DIAPHRAGM	RUBBER	EPDM	EN 681-1
9	SPRING	STAINLESS STEEL	AISI304	EN 10088-3
10	FLAT SEAL	RUBBER	EPDM	EN 681-1
11	FLAT SEAL	RUBBER	EPDM	EN 681-1
12	COVER	DUCTILE IRON	EN GJS-500-7	EN 1563
13	HEX NUT	STAINLESS STEEL	A2	EN ISO3506-1
14	DIAPHRAGM SUPPORT	DUCTILE IRON	EN GJS-500-7	EN 1563
15	OBTURATOR	DUCTILE IRON	EN GJS-500-7	EN 1563
16	REGULATING PLUG	STAINLESS STEEL	AISI304	EN 10088-3
17	SEAT	STAINLESS STEEL	AISI304	EN 10088-3
18	STEM	STAINLESS STEEL	AISI304	EN 10088-3
19	PILOT ACM200	STAINLESS STEEL		-
20	PILOT ACV100RS	STAINLESS STEEL		-
21	PRESSURE GAUGE	STAINLESS STEEL		-
22	BALL VALVE	NICKEL BRASS		-
23	NEEDLE VALVE	STAINLESS STEEL		-
24	Y STRAINER + ORIFICE	BRASS + S.S. AISI316		-

STANDARD	
EN 1074-1	VALVES FOR WATER SUPPLY
EN 1074-5	REGULATING VALVES
EN 558 S1	FACE TO FACE
EN 1092-2	DRILLING FLANGES

DRAWING NAME

SURGE ANTICIPATOR PRESSURE RELIEF AUTOMATIC CONTROL VALVE S.879

TYPE	DN	PN
879/BB8X99 - M305	**50-600**	**10-16**

REV	DATE	SIZE	SHEET	SCALE
01	2021.03.16	A3	1-2	1:5

ACMO Member of the AVR group

PRESENT DRAWING IS EXCLUSIVE COPYRIGHT OF AC.MO S.r.l.. ACCORDING TO THE LAWS IN FORCE IN ITALY. THEREFORE IT CANNOT BE COPIED NOR RELEASED TO ANY THIRD PART, WITHOUT PREVIUS WRITTEN APPROVAL OF AC.MO S.r.l..
All dimension in mm.

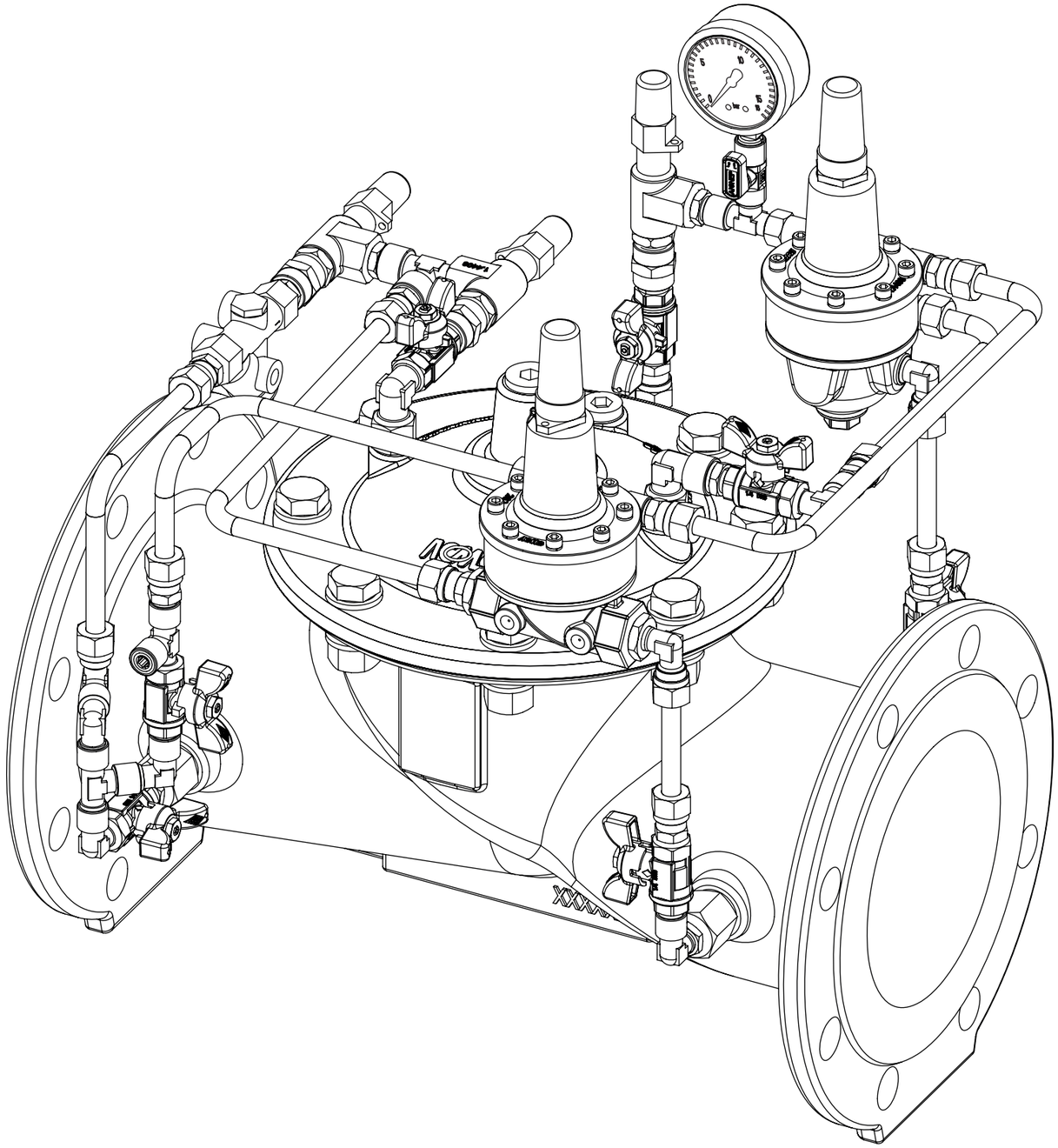

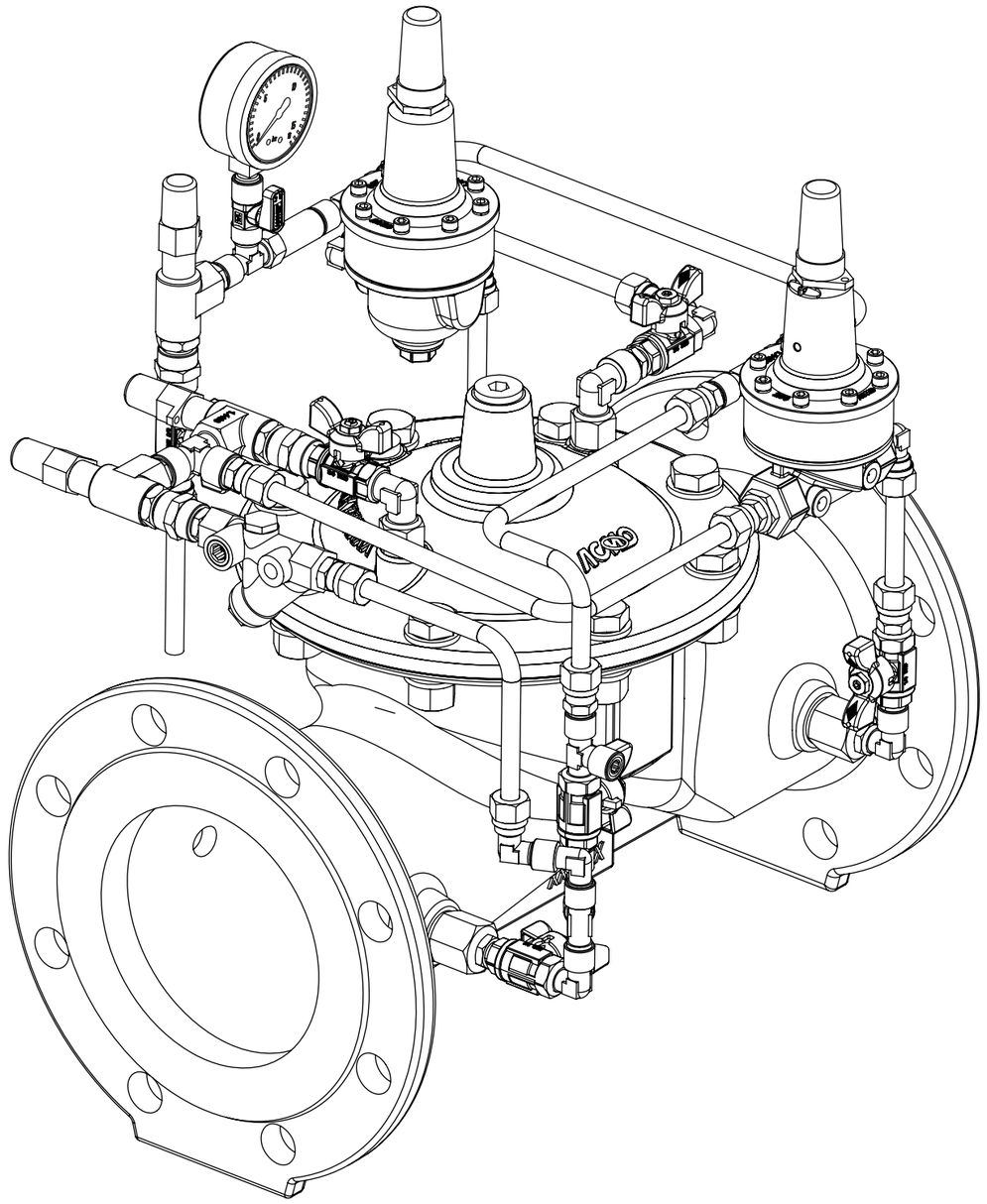

DRAWING NAME				
SURGE ANTICIPATOR PRESSURE RELIEF AUTOMATIC CONTROL VALVE S.879				
TYPE			DN	PN
879/BB8X99 - M305			**50-600**	**10-16**
REV	DATE	SIZE	SHEET	SCALE
01	2021.03.16	A3	2-2	-

Member of the AVK group

PRESENT DRAWING IS EXCLUSIVE COPYRIGHT OF AC.MO S.r.l.. ACCORDING TO THE LAWS IN FORCE IN ITALY.
THEREFORE IT CANNOT BE COPIED NOR RELEASED TO ANY THIRD PART, WITHOUT PREVIUS WRITTEN APPROVAL OF AC.MO S.r.l..
All dimension in mm.